We connect and protect

# Square Nut Kit

## Data Solutions

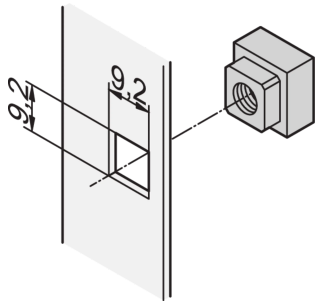

Square nuts have higher contact surface and dont get rounded off unlike hex nuts. For precise, anti-twist secure mounting without clearance, use square nuts.

## CERTIFICATIONS

RoHS COMPLIANT

## FEATURES

For precise, anti-twist secure mounting without clearance

For standard grounding use a square grounding nut and washer on at least one attachment point

## SPECIFICATIONS

**Product Type:** Nut

**Material:** Steel

**Finish:** Zinc Plated

Table 1/1

| Catalog Number | Package Quantity | Type |
|---|---|---|
| 21101-172 | 50 | Square Nut, Grounding |
| 21101-171 | 50 | Square Nut, Grounding |
| 21100-558 | 50 | Square Nut |
| 21101-007 | 100 | Square Nut |

## WARNING

nVent products shall be installed and used only as indicated in nVent's product instruction sheets and training materials. Instruction sheets are available at www.nvent.com and from your nVent customer service representative. Improper installation, misuse, misapplication or other failure to completely follow nVent's instructions and warnings may cause product malfunction, property damage, serious bodily injury and death and/or void your warranty.

Our powerful portfolio of brands:

CADDY ERICO HOFFMAN ILSCO SCHROFF TRACHTE

©2026 nVent. All nVent marks and logos are owned or licensed by nVent Services GmbH or its affiliates. All other trademarks are the property of their respective owners. nVent reserves the right to change specifications without notice.

This document is system-generated.