We connect and protect

Multi-Function Clip

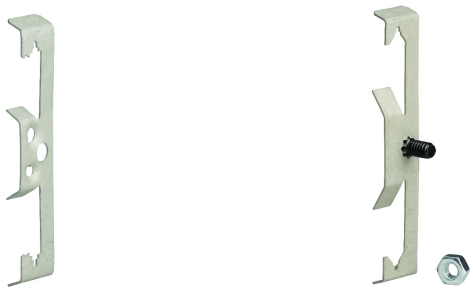

CERTIFICATIONS

FEATURES

Provides attachment of electrical boxes

Supports #10-24 and 1/4-20 (M6) threaded bridle rings

Instills more confidence installing conduit, MC/AC, and low voltage applications

SPECIFICATIONS

Table 1/2

Catalog Number	Article Number	Material	Finish	Rod Size (RS)	Wire Size	Flange Thickness (FT)
4Z34	170650	Spring Steel	nVent CADDY Armour	M4, M6, M8, M10	3.9 - 4.8 mm	3.0 - 9.5 mm

Table 2/2

Catalog Number	Article Number	Hole Size (HS)	Screw Included	Static Load 1 (F1)	Static Load 2 (F2)
4Z34	170650	6.5 mm	No	110N	90N

ADDITIONAL PRODUCT DETAILS

NEC® 300.11 requires dedicated drop wire/rod and EC311.

4Z parts installed on 3/8" (M10) smooth rod in the F2 direction has a Static Load Rating of 15 lb (67 N).

DIAGRAMS

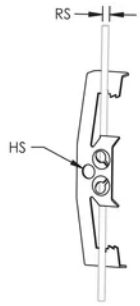

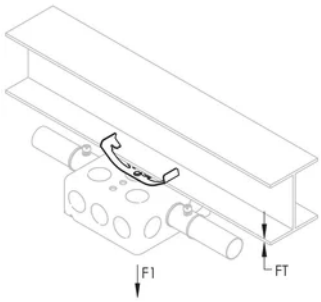

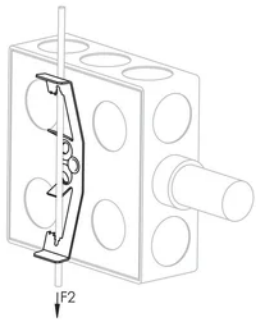

WARNING

nVent products shall be installed and used only as indicated in nVent's product instruction sheets and training materials. Instruction sheets are available at www.nvent.com and from your nVent customer service representative. Improper installation, misuse, misapplication or other failure to completely follow nVent's instructions and warnings may cause product malfunction, property damage, serious bodily injury and death and/or void your warranty.

North America
+1.800.753.9221
Option 1 – Customer Care
Option 2 – Technical Support

Europe
Netherlands:
+31 800-0200135
France:
+33 800 901 793

Europe
Germany:
800 1890272
Other Countries:
+31 13 5835404

APAC
Shanghai:
+ 86 21 2412 1618/19
Sydney:
+61 2 9751 8500

Our powerful portfolio of brands:

CADDY ERICO HOFFMAN ILSCO SCHROFF TRACHTE

©2026 nVent. All nVent marks and logos are owned or licensed by nVent Services GmbH or its affiliates. All other trademarks are the property of their respective owners. nVent reserves the right to change specifications without notice.

This document is system-generated.