We connect and protect

Cage Nut Kit

Data Solutions

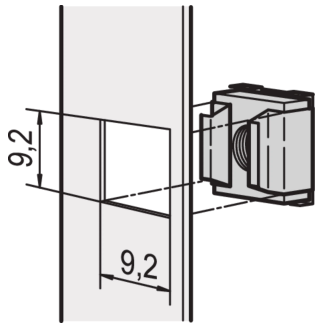

Cage nuts permit range of choice of nut and bolts sizes and easily replaced unlike pre-threaded holes. Cage nuts are easy to use on materials too thin or soft to be threaded.

CERTIFICATIONS

RoHS COMPLIANT

FEATURES

For assembly of parts which require a thread size of M4 or M5

For standard grounding use a grounding nut and washer on at least one attachment point

SPECIFICATIONS

Product Type: Nut

Material: Steel

Table 1/1

Catalog Number	Finish	Package Quantity	Thread Size	Product Family	Type	Works With
21120-129	Zinc Plated	10	M5		Cage Nut, Grounding	Front Panels, Eurorack, Novastar, Varistar, Varistar CP

CatalogNumber	Finish	Package Quantity	Thread Size	Product Family	Type	Works With
21120-127	Zinc Plated	10	M4		Cage Nut, Grounding	Front Panels, Eurorack, Novastar, Varistar, Varistar CP
21120-131	Zinc Plated	10	M6	RatiopacPRO, RatiopacPRO AIR, CompacPRO, PropacPRO, Comptec, Inpac, MultipacPRO	Cage Nut, Grounding	Front Panels, Eurorack, Novastar, Varistar, Varistar CP
21100-003	Zinc Plated	50	M6	RatiopacPRO, RatiopacPRO AIR, CompacPRO, PropacPRO, Comptec, Inpac, MultipacPRO	Cage Nut	Front Panels, Eurorack, Novastar, Varistar, Varistar CP
21100-215	Zinc Plated	50	M5		Cage Nut	Front Panels, Eurorack, Novastar, Varistar, Varistar CP
21100-001	Zinc Plated	50	M4		Cage Nut	Front Panels, Eurorack, Novastar, Varistar, Varistar CP
21100-216	Zinc Plated	100	M5		Cage Nut	Front Panels, Eurorack, Novastar, Varistar, Varistar CP
21100-004	Zinc Plated	100	M6	RatiopacPRO, RatiopacPRO AIR, CompacPRO, PropacPRO, Comptec, Inpac, MultipacPRO	Cage Nut	Front Panels, Eurorack, Novastar, Varistar, Varistar CP
21120-128	Zinc Plated	100	M4		Cage Nut, Grounding	Front Panels, Eurorack, Novastar, Varistar, Varistar CP

CatalogNumber	Finish	Package Quantity	Thread Size	Product Family	Type	Works With
21120-132	Zinc Plated	100	M6	RatiopacPRO, RatiopacPRO AIR, CompacPRO, PropacPRO, Comptec, Inpac, MultipacPRO	Cage Nut, Grounding	Front Panels, Eurorack, Novastar, Varistar, Varistar CP
21120-130	Zinc Plated	100	M5		Cage Nut, Grounding	Front Panels, Eurorack, Novastar, Varistar, Varistar CP
21100-002	Zinc Plated	100	M4		Cage Nut	Front Panels, Eurorack, Novastar, Varistar, Varistar CP

WARNING

nVent products shall be installed and used only as indicated in nVent's product instruction sheets and training materials. Instruction sheets are available at www.nvent.com and from your nVent customer service representative. Improper installation, misuse, misapplication or other failure to completely follow nVent's instructions and warnings may cause product malfunction, property damage, serious bodily injury and death and/or void your warranty.

Our powerful portfolio of brands:

CADDY ERICO HOFFMAN ILSCO SCHROFF TRACHTE

©2026 nVent. All nVent marks and logos are owned or licensed by nVent Services GmbH or its affiliates. All other trademarks are the property of their respective owners. nVent reserves the right to change specifications without notice.

This document is system-generated.