We connect and protect

C-Rail Cable Shell

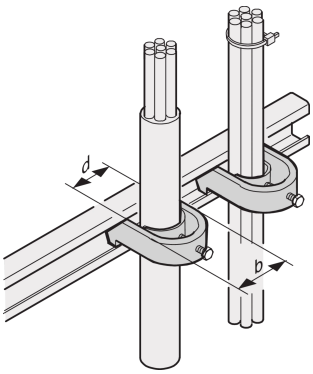

C-Rails are for better cable management. Installation generally behind the 19" uprights. They are compatible with standard cable clabs.

CERTIFICATIONS

RoHS COMPLIANT

FEATURES

For mounting of cables on C-profiles and cable support rails

SPECIFICATIONS

Product Type: Clamp

Material: Steel

Table 1/1

Catalog Number	Finish	Package Quantity	Product Family	Type	Works With
20114-728	Tin Plated	10	Varistar CP	Cable Clamp	
20118-778	Tin Plated	10	Varistar CP	Cable Clamp	
20118-777	Tin Plated	10	Varistar CP	Cable Clamp	
20118-776	Tin Plated	10	Varistar CP	Cable Clamp	
20114-729	Tin Plated	10	Varistar CP	Cable Clamp	
20118-775	Tin Plated	10	Varistar CP	Cable Clamp	
20114-731	Tin Plated	10	Varistar CP	Cable Clamp	Varistar CP

Catalog Number	Finish	Package Quantity	Product Family	Type	Works With
20114-730	Tin Plated	10	Varistar CP	Cable Clamp	

WARNING

nVent products shall be installed and used only as indicated in nVent's product instruction sheets and training materials. Instruction sheets are available at www.nvent.com and from your nVent customer service representative. Improper installation, misuse, misapplication or other failure to completely follow nVent's instructions and warnings may cause product malfunction, property damage, serious bodily injury and death and/or void your warranty.

North America
All locations
+1.763.422.2661
Chat with us:
nvent.com/schroff

Europe
Straubenhardt, Germany
+49.7082.794.0
Betschdorf, France
+33.3.88.90.64.90
Warsaw, Poland
+48.22.209.98.35
Assago, Italy
+39.02.932.7141
Chat with us:
nvent.com/schroff

Asia
Shanghai, China
+86.21.2412.6943
Qingdao, China
+86.532.8771.6101
Singapore
+65.6768.5800
Shin-Yokohama, Japan
+81.45.476.0271
Chat with us:
nvent.com/schroff

Middle East & India
Dubai, United Arab Emirates
+971.4.378.1700
Bangalore, India
+91.80.6715.2001
Istanbul, Turkey
+90.216.250.7374
Chat with us:
nvent.com/schroff

Our powerful portfolio of brands:

CADDY ERICO HOFFMAN ILSCO SCHROFF TRACHTE

©2026 nVent. All nVent marks and logos are owned or licensed by nVent Services GmbH or its affiliates. All other trademarks are the property of their respective owners. nVent reserves the right to change specifications without notice.

This document is system-generated.