We connect and protect

Quick Release Fastener

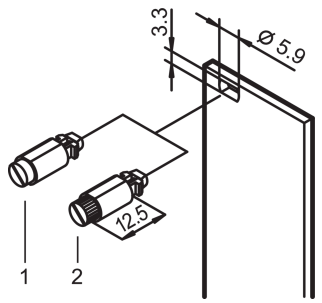

1/4 rotary lock with defined stop.

CERTIFICATIONS

RoHS COMPLIANT

FEATURES

- 1/4 rotary lock with defined stop
- Identification of locking position due to slot position
- Vibration and shake proof
- Qty 100 pieces

SPECIFICATIONS

Works With: Front Panels
Product Type: Hardware Kit
Finish: Nickel Plated
Material: Steel; Zinc Alloy; Thermoplastic

Table 1/2

Catalog Number	Color	Package Quantity	Color Code	Depth	Height	Width
21101-850	Jet Black	100	RAL 9005	20.6mm	6mm	7mm
21101-847	Pebble Grey	100	RAL 7032	16.7mm	6mm	7mm
21101-849	Pebble Grey	100	RAL 7032	20.6mm	6mm	7mm

CatalogNumber	Color	Package Quantity	Color Code	Depth	Height	Width
21101-848	Jet Black	100	RAL 9005	16.7mm	6mm	7mm

Table 2/2	
Catalog Number	**Fastener Type**
21101-850	Knurled, Slotted Head
21101-847	Slotted Head
21101-849	Knurled, Slotted Head
21101-848	Slotted Head

ADDITIONAL PRODUCT DETAILS

Quick-release fasteners: mounting without threaded inserts.

WARNING

nVent products shall be installed and used only as indicated in nVent's product instruction sheets and training materials. Instruction sheets are available at www.nvent.com and from your nVent customer service representative. Improper installation, misuse, misapplication or other failure to completely follow nVent's instructions and warnings may cause product malfunction, property damage, serious bodily injury and death and/or void your warranty.

North America
All locations
+1.763.422.2661
Chat with us:
nvent.com/schroff

Europe
Straubenhardt, Germany
+49.7082.794.0
Betschdorf, France
+33.3.88.90.64.90
Warsaw, Poland
+48.22.209.98.35
Assago, Italy
+39.02.932.7141
Chat with us:
nvent.com/schroff

Asia
Shanghai, China
+86.21.2412.6943
Qingdao, China
+86.532.8771.6101
Singapore
+65.6768.5800
Shin-Yokohama, Japan
+81.45.476.0271
Chat with us:
nvent.com/schroff

Middle East & India
Dubai, United Arab Emirates
+971.4.378.1700
Bangalore, India
+91.80.6715.2001
Istanbul, Turkey
+90.216.250.7374
Chat with us:
nvent.com/schroff

Our powerful portfolio of brands:
CADDY ERICO HOFFMAN ILSCO SCHROFF TRACHTE

©2026 nVent. All nVent marks and logos are owned or licensed by nVent Services GmbH or its affiliates. All other trademarks are the property of their respective owners. nVent reserves the right to change specifications without notice.

This document is system-generated.