We connect and protect

Cage Nut Kit, M6, 100 pcs

Data Solutions

KATALOGNUMMER

21100-004

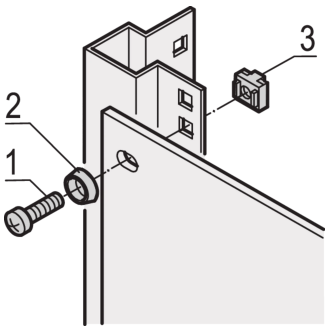

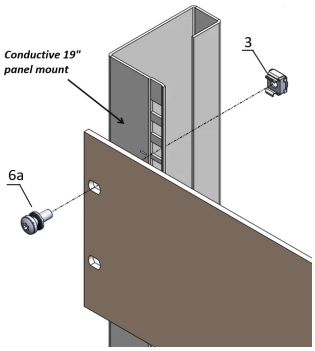

Cage nuts permit range of choice of nut and bolts sizes and easily replaced unlike pre-threaded holes. Cage nuts are easy to use on materials too thin or soft to be threaded.

CERTIFICERINGER

RoHS COMPLIANT

FUNKTIONER

For assembly of parts which require a thread size of M4 or M5

For standard grounding use a grounding nut and washer on at least one attachment point

PRODUKTEGENSKABER

Finish: Forzinket Stål

Pakke mængde: 100

Thread Size: M6

Materiale: Stål

Produktfamilie: RatiopacPRO; RatiopacPRO AIR; CompacPRO; PropacPRO; Comptec; Inpac; MultipacPRO

Product Type: Nut
Type: Cage Nut
Works With: Front Panels; Eurorack; Novastar; Varistar; Varistar CP
Net Weight: 0.46kg

ADVARSEL

nVent-produkter skal kun installeres og anvendes som angivet i nVents produktvejledninger og træningsmaterialer. Vejledninger er tilgængelige på www.nvent.com og hos din nVent kundeservicerepræsentant. Forkert installation, misbrug, fejlanvendelse eller anden undladelse af fuldt ud at følge nVents instruktioner og advarsler kan medføre funktionsfejl, materielle skader, alvorlige personskader eller død og/eller ugyldiggøre din garanti.

Vores kraftfulde portefølje af mærker:

CADDY ERICO HOFFMAN ILSCO SCHROFF TRACHTE

©2026 nVent. All nVent marks and logos are owned or licensed by nVent Services GmbH or its affiliates. All other trademarks are the property of their respective owners. nVent reserves the right to change specifications without notice.

This document is system-generated.